INSTALLATION & MAINTENANCE INSTRUCTIONS

ACTIVE CHILLED BEAM

ACB40.10

2-Way Discharge

4-Pipe Cooling/Heating Coil

DADANCO

Breathing Life Into Your Building

DESCRIPTION

Active Chilled Beam ACB40 2-way discharge 4-Pipe Chilled Beam Units are designed for 'Lay-In' installation in the ceiling with an exposed supply/return air fascia designed to discharge air across the ceiling from the two supply air outlets, with return air through the centre of the unit.

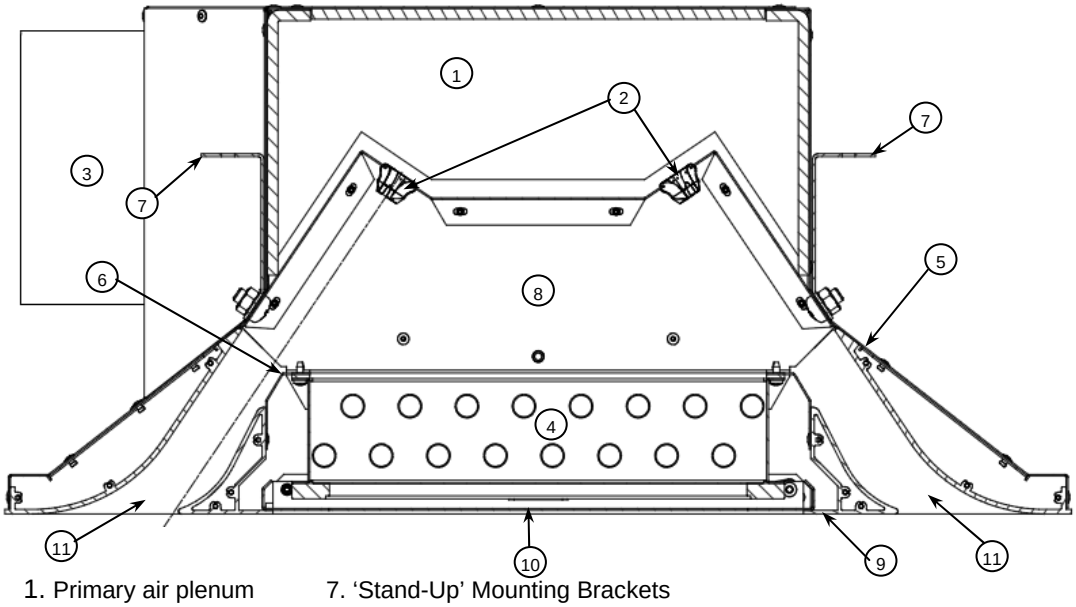

1. Primary air plenum
2. Primary air nozzles
3. Primary Air Spigot
4. Heat Exchanger Coil
5. Unit Case
6. Coil Mounting Frame
7. 'Stand-Up' Mounting Brackets
8. Entrainment/Mixing Chamber
9. Combination Supply/Return Air Grille Assembly
10. Return air grille (perforated metal panel) with Lint Screen (if specified)
11. Supply Air Grille Element (2 elements)

UNIT CONSTRUCTION

As illustrated above, each ACB40-A.482 Active Chilled Beam induction unit is comprised of:

- Primary Air plenum (1), fitted with two rows of primary air nozzles (2), 1 row for each supply outlet and a 150mm round or 200mm ovalised primary air spigot connection (3).
- 4 x Mounting brackets (7) located mid-height of the unit with 2 x ∅11x50mm mounting slots per bracket.
- Twin air entrainment / mixing chambers (8) formed by the unit case (5), primary air plenum (1), secondary heat exchanger coil (4) and coil mounting frame (6).
- 4-Pipe secondary heat exchanger coil (4), constructed of 1/2" copper tube mechanically expanded into 0.145mm thick aluminium fins, complete with 4 brass 1/2" BSP Male flat face tapered thread water inlet / outlet connections,
- The heat exchanger coil (4) is attached to the coil mounting frame (6) by removable 6mm fixing screws and is protected by a mesh lint screen above the return air grille section (if specified).
- Combined Supply/Return Grille (9): 2 low resistance supply air grilles (11) are arranged one on each side of the perforated centre unit return air grille (10) which incorporates the return air lint screen (if specified).
- The primary air commissioning sampling tube is an internal component accessible through the swing-down return air grille panel
- The serial number plate is located at the outer bottom side of the entrainment chamber

DADANCO Active Chilled Beam ACB40 4-Pipe units for suspended ceiling tile grid 'Lay-in' systems are manufactured to suit four different active coil lengths, and are suitable for any combination of air and water handing connections. (Specify unit configuration at time of order)

©Copyright DADANCO Pty Ltd 2010 – All Rights Reserved

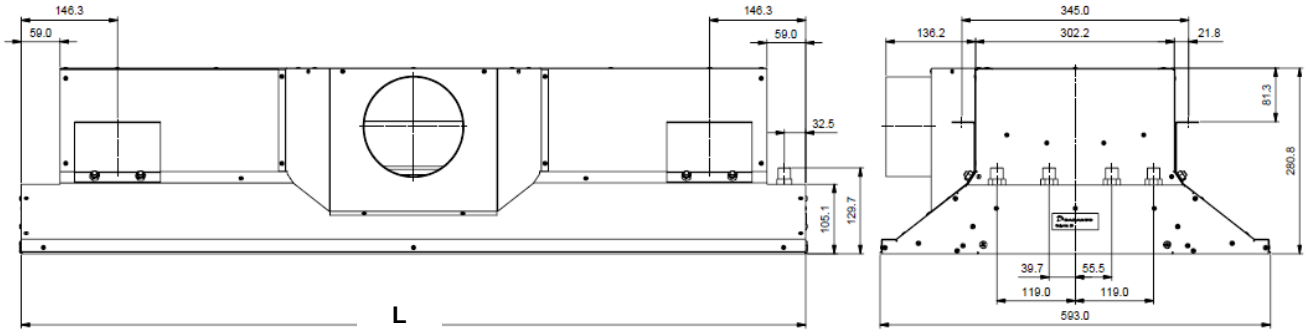

L +5mm Including Screw Heads

PHYSICAL DATA

Active Chilled Beam	Coil Finned Length **A** (mm)	Overall Case Length (mm)	Grille Face Overall Length **L** (mm)	Unit Weight (kg)	Coil Water Capacity (Litres)	Installation Type
ACB40.08-0450.282	450	474	592	17.0	1.186	Nominal 595x595mm suspended T-Bar Ceiling 'Lay-In'
ACB40.08-1050.282	1050	1074	1192	29.0	2.316	
ACB40.08-1500.282	1500	1524	1642	49.5	3.246	
ACB40.08-1650.282	1650	1674	1792	58.1	3.571	

UNIT NOMENCLATURE

Model Number: **ACB40.10 – A. 4 8 2**

Example: **ACB40.10-1050.482**

Product Family (ACB40)

Unit Coil Finned Length (mm)

Designates 4-Pipe Coil

Coil Height (**8** Tube Rows)

Coil Depth (**2** Rows)

STANDARD SPECIFICATION

- ½" BSP male flat face tapered thread water connections (Vertical Water Fittings)
- Return Air Grille – Swing-Down Perforated Metal Panel
- Internally insulated primary air plenum

OPTIONS

- ½" SAE flare or ½" plain copper stub water connections (Specify at time of order)
- Return Air Grille options - Custom perforated panel (Specify at time of order)
- 'Side' or 'End' primary air spigot location
- Secondary coil lint screen

INSTALLATION

UNIT AS DELIVERED

Each unit, as delivered by Dadanco, will be complete with: -

- All primary air nozzles fitted
- 150mm primary air spigot (unless otherwise specified)
- ½" brass BSP male flat face tapered thread fittings on the coil inlets and outlets (unless otherwise specified)
- The combined supply/return air grille incorporating the lint screen (if specified), fitted
- 4 mounting brackets attached to the unit for mounting the unit to the ceiling under-slab or ceiling members

©Copyright DADANCO Pty Ltd 2010 – All Rights Reserved

INSTALLER TO PROVIDE

The installer is to provide the following:

- Secondary chilled water piping, flow and return, with isolation valves in both services, and a flow control valve.

  In addition to the flow control valve, flow limiting valves may have been specified and if so, are to be installed where shown on the drawings.

  NOTE: It is recommended that the unit be connected with readily removable lengths of pipe, or flexible hoses, between the coil connections and the first valve to allow the removal of the unit or cooling coil, should this be required during maintenance.
- A suspension system and threaded rods for mounting the unit to the ceiling under-slab or ceiling members
- Air volume control or balancing device
- Ceiling T-Bar frame or surround to emulate T-Bar if unit is to be installed in rigid plasterboard ceiling

INSTALLING THE UNIT

To prepare the Active Chilled Beam ACB40 for mounting and connection, carry out the following procedures: -

INSTALL UNIT CABINET AND GRILLE

1. Determine the orientation of the air and water connections in relation to the site plan.
2. Check the unit space to ensure adequate clearance for piping and duct connections.
3. Check that the available ceiling space for the installation of the unit is free of other services and structural members.
4. Determine the position of the unit in the ceiling grid.
5. Determine the position of the first under-slab 'Unistrut' 500mm channel bracket length in the slab above or a ceiling structural member. The first 'Unistrut' channel bracket should be positioned approximately 80mm from the end of the unit cabinet and centred in relation to the width of the unit and its opening in the ceiling grid. Drill and secure the 'Unistrut' channel bracket to the slab above or ceiling member with M8 or M10 bolts.

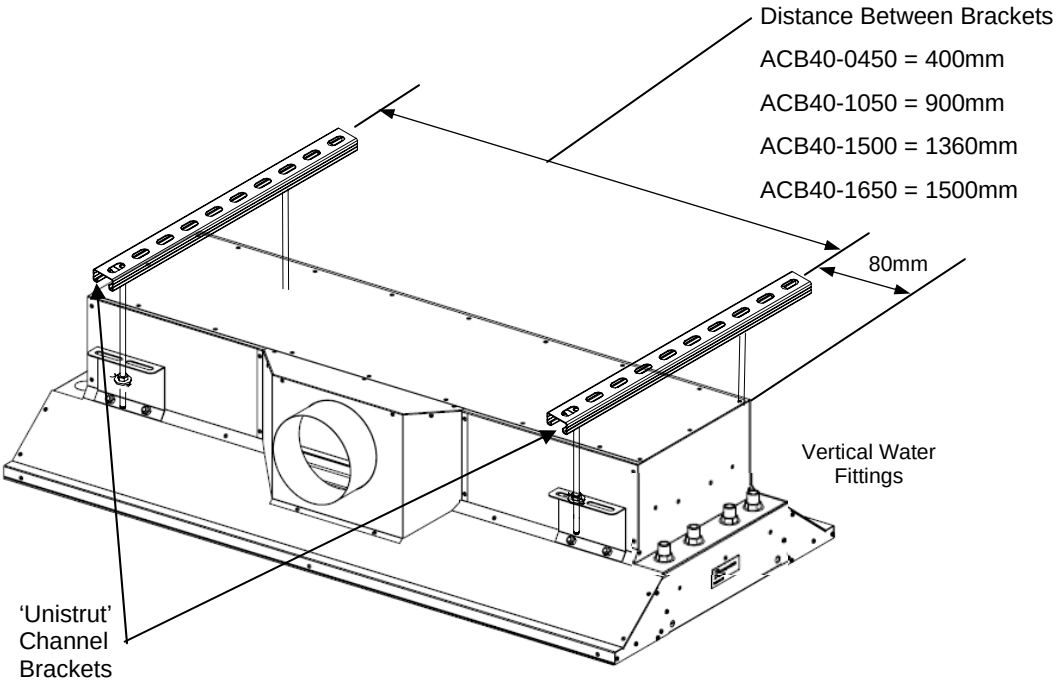

6. Install the second 'Unistrut' channel bracket length at a position parallel to and at the correct distance from the first channel bracket along the length of the unit, according to the length of the unit as shown in the illustration above. Drill and secure with M8 or M10 bolts.

©Copyright DADANCO Pty Ltd 2010 – All Rights Reserved

7. Determine required length of M10 threaded rod between the 'Unistrut' channel brackets and unit stand-up brackets (7). Rod length should be approximately the distance from the suspended T-Bar ceiling tile frame lip to the underside of the slab above, or ceiling members, less 140mm. This provides sufficient threaded rod length to permit the unit to be raised and lowered without removing the hanging rods.

8. Install 1 M10 flat washer, hex nut and 'Unistrut' fixture nut to one end of each M10 threaded rod.

9. Install 1 M10 hex nut and flat washer to the other end of the threaded rod and insert each rod through the slots of the ACB unit stand-up brackets

10. Install M10 flat washer and hex nut to the treaded rod at the underside of the unit stand-up bracket to hold the rod loosely on the bracket. Do Not tighten nuts at this time.

11. Raise the ACB40 unit case into position above the ceiling grid frame, aligned to the ceiling grid opening. Insert the 'Unistrut' Fixture Nuts at the top end of the M10 threaded rods into the slots of the 'Unistrut' channel brackets.

    Turning the 'Unistrut' Fixture Nut in a clockwise direction (tightening) will rotate the fixture nut into the locked position in the Unistrut channel bracket.

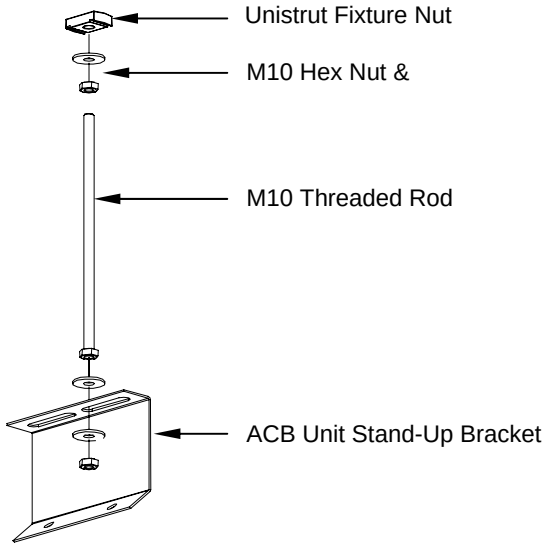

12. If required, relocate the threaded rods, one at a time, to the front or rear slots of the ACB40 unit stand-up brackets, whichever best suits the alignment of the 'Unistrut' channel bracket lengths to the ceiling grid opening in relation to the unit case.

13. Tighten the M10 hex nuts at the 'Unistrut' channel bracket to secure the top end of the treaded rods.

14. Raise the position of the unit by tightening the lower hex nuts (clockwise rotation) until the bottom lip of the unit is approximately 60-70mm clear of the top of the suspended ceiling grid T-Bar frame.

15. Lower the ACB40 unit and supply/return grille into the T-Bar frame by turning the bottom hex nuts in an anti-clockwise direction. Unit case and grille must fit completely into the T-Bar frame as if it were a ceiling tile.

    NOTE: Unit can be moved left to right in the slots of the stand-up brackets (7) and back to front along the 'Unistrut' channel bracket lengths to achieve proper alignment prior to tightening the fasteners.

16. Ensure the unit is level and properly aligned in the T-Bar frame before tightening the mounting hardware.

17. Tighten all M10 hex nuts once the unit is properly positioned and aligned to the T-Bar frame.

©Copyright DADANCO Pty Ltd 2010 – All Rights Reserved

WATER CONNECTIONS

As per the air conditioning system design drawings, connect the unit to the secondary chilled water loop.

- Position all isolation, control and balancing valves according to the design drawings

  NOTE: Install all valves and make all connections as per industry approved plumbing practices.

- Connect the two fittings of the secondary coil (inlet / outlet) to the chilled water reticulation system.

  NOTE: For 4-pipe systems, either fitting of each circuit can be flow or return.

  For 4-pipe coils, the inner 2 connections are for the heating circuit and the outermost connections are the cooling circuit.

  NOTE: It is recommended that the unit be connected with readily removable pipe lengths and barrel-unions or flexible hoses to permit disconnection and removal of the coil (4), should this be required during maintenance.

  CAUTION: Ensure alignment of secondary coil water pipes is not disturbed during connection. Cracks or leaks in pipes attributed to misalignment or abuse will void the coil warranty.

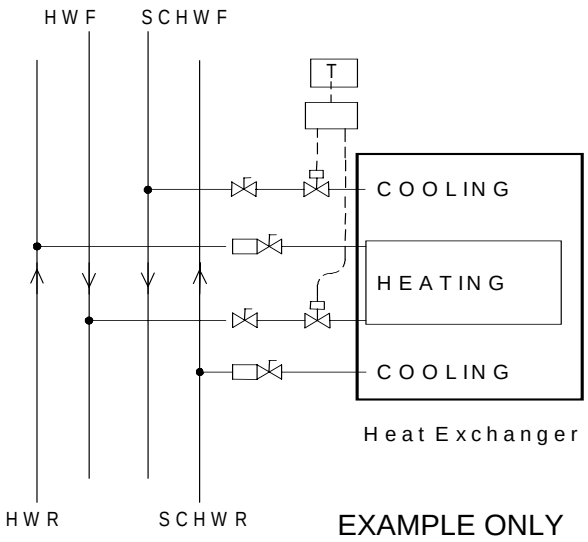

- In preparing to make the secondary chilled water (SCHW) piping connections to the coil, ensure that the piping is aligned with the coil connection fittings. If BSP connections are fitted, use the correct tools to grip the swivel nut on the hose and BSPT union on the coil and apply only sufficient force to make the joint.

  Take care during this jointing process to ensure that the coil-piping alignment is maintained.

  Do not apply excessive force in tightening water connection fittings. The use of excessive force will result in fracturing of the water pipes or their solder connections, which will void the coil warranty.

PRIMARY AIR DUCT CONNECTION

- Primary air inter-connecting flexible duct should be a minimum of 1000mm straight or slightly radiused 150mm diameter flexible duct between the primary air duct trunk and the primary air spigot of the ACB40 unit.

  Where rigid primary air duct is used, flexible connecting duct can be of a shorter length with a straight approach to the unit inlet from the nearest radiused bend in the rigid ductwork.

  NOTE: Do Not install flexible duct with sharp bends or restrictions upstream of the ACB40 unit primary air spigot connection and plenum.

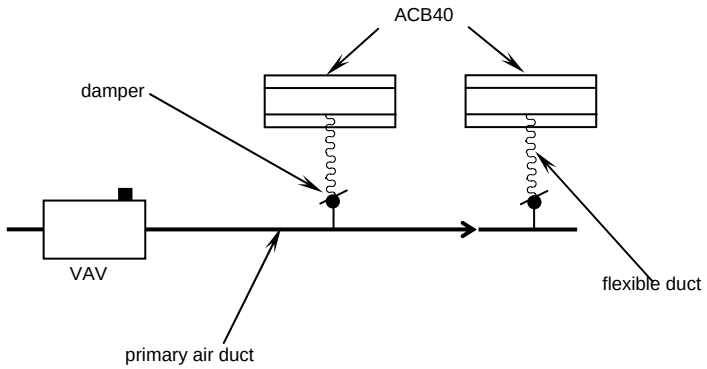

ACB40 units should be connected to the primary air duct through a suitable Volume Control Damper (VCD) or other suitable means of adjusting primary air pressure during commissioning.

NOTE: Do Not connect primary air of ACB40 units in series to one another. For correct primary air performance and balancing, each unit must be balanced independently.

- Insulate the primary air spigot up to the primary air duct insulation, and make a vapour tight seal with approved duct tape at the duct and plenum insulation joint.

©Copyright DADANCO Pty Ltd 2010 – All Rights Reserved

COMMISSIONING

Test and Operating Water Pressures:

Maximum recommended site pressure test: 250 Bar (2500 kPa)

Maximum recommended operating pressure: 16.8 Bar (1680 kPa)

Secondary Water Commissioning: For secondary water flow commissioning, a suitable balancing valve should be installed in order to measure and adjust the secondary water flow to the designed/specified value. Adjust the balancing valve in order to achieve the specified water flow rate per unit, according to the unit schedule.

For 4-Pipe Heating and Cooling systems, balance the ACB40 cooling and heating water flows separately to the specified values for optimum results.

Primary Air Commissioning: The only way to accurately commission the primary air flow to the ACB40 Unit is to measure the static pressure in the plenum. To achieve this, remove the sealing plug from the commissioning point sampling tube and connect the pressure differential instrument (Manometer) to the sampling tube.

The commissioning sampling tube is accessible through the swing-down return air panel.

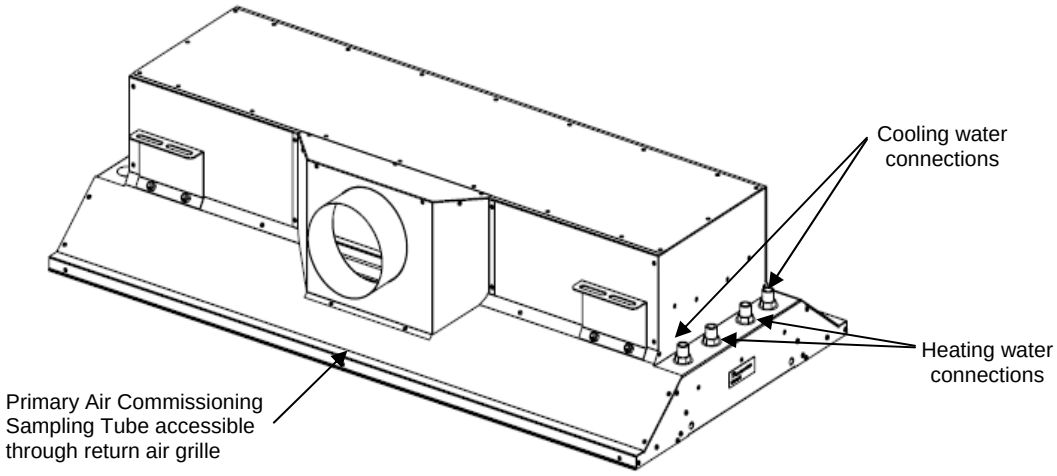

NOTE: Do not attempt to measure the static pressure back from the unit at the start of a flexible duct connection. Measure only at the provided commissioning point (sampling tube).

To obtain the designed primary air and total air flow rate, adjust the damper / volume control device as necessary to obtain the specified design primary air plenum pressure to achieve the required primary air flow.

The primary air quantity can be obtained from the pressure/air flow characteristic table or curve supplied for the unit size.

Replace the rubber plug to seal the primary air sampling tube on completion.

NOTES:

1. Do not attempt to confirm total supply air quantities using a balancing hood measurement method. The airflow from the ACB40 unit is a low velocity, low pressure air stream that is well below the accuracy range of restriction imposing measurement hoods. Resistance imposing balancing hoods are not recommended for validating total air quantity.
2. Do not attempt to confirm the primary air flow quantity by conventional Pitot-traverse methods in the primary air ductwork. Low duct velocities and boundary layer measurement inaccuracies do not permit accurate measurements of duct velocities for primary air installations.

©Copyright DADANCO Pty Ltd 2010 – All Rights Reserved

MAINTENANCE OPERATIONS

In normal operating conditions the minimum required maintenance involves the heat exchanger coil (4) and the lint screen (if fitted), and consists of:

- Quarterly visual inspection to comply with local regulations for grime, lint, bacterial growth, etc., on the heat exchanger coil (4). If found, such deposits must be removed, using appropriate cleaning methods.
- Yearly mechanical cleaning of heat exchanger coil (4) and lint screen (e.g. vacuuming, brushing).
- Inspect the lint screen by lowering the return air grille (10) and removing the lint screen and frame (if fitted). Clean as required.
- Inspect the nozzles (2) for any deposition of dust. Clean if dust is present.

To gain access to the secondary heat exchanger coils and/or lint screen (if fitted)

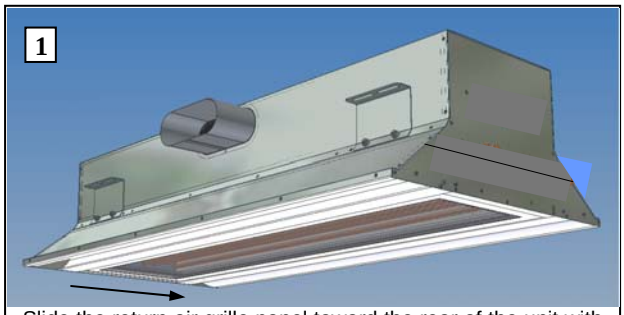

Slide the return air grille panel toward the rear of the unit with a slight upward lifting motion at the front edge of the panel

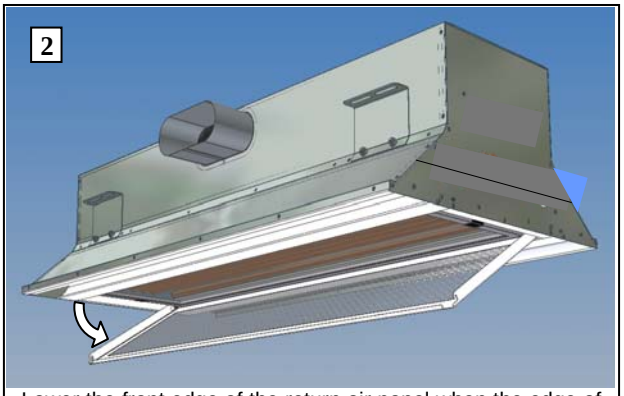

Lower the front edge of the return air panel when the edge of the panel clears the grille extrusion

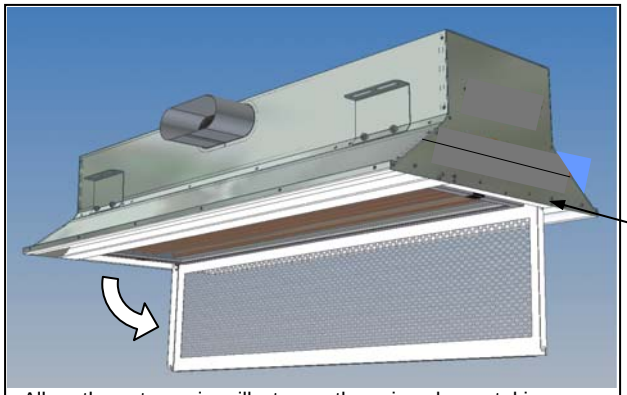

Allow the return air grille to gently swing down, taking care not to damage the painted surface of the grille against the bordering extrusions

With the unit removed from the ceiling, remove grille panel from unit by removing hinge pin securing screws at each side of unit

To remove the secondary heat exchanger coil (4) make sure that both water line isolation valves are closed and the water supply is turned off.

1. Disconnect the water inlet / outlet connections to the ACB40 unit.
2. Disconnect the primary air flexible duct from the primary air spigot if needed (end air connections only).
3. Raise the ACB40 unit above the ceiling grid, or remove the ACB40 unit from the ceiling grid.
4. Remove the perforated return air panel from the ACB40 unit to gain access to the coil and brackets.
5. Remove the coil fixing screws at each end and in the centre of each side of the cooling coil.
6. Gently slide the coil fittings through the penetrations in the unit case to gain clearance to remove the coil at an angle
7. Remove the coil (4) from the unit, taking care not to bend or damage the water connection pipes or fittings.
8. Reverse the procedure to reinstall the heat exchanger coil, taking care not to bend the water connection pipes.
9. Align the holes in the coil side frames to the mounting holes in the coil mounting bracket and reinstall the coil fixing screws, checking to ensure the coil is firmly retained.
10. Re-install the return air grille assembly to the ACB40 unit.

©Copyright DADANCO Pty Ltd 2010 – All Rights Reserved

11. Re-install the unit in the ceiling grid by lowering the unit into the ceiling grid as described in the installation steps on page 5 of this manual.
12. Reconnect the primary air duct and water inlet / outlets.
13. Confirm the flow control valve is at the design setting (Re-commission Cooling & Heating Water flows).
14. Confirm the primary air quantity to the specified value (Re-commission Primary Air Pressure).

DISCLAIMER: While every effort is made to ensure the details contained herein are kept up to date, in the interest of ongoing product development DADANCO reserves the right to alter the information without notice.

©Copyright DADANCO Pty Ltd 2010 – All Rights Reserved